ภาคผนวกที่ 4

เอกสารสอบเทียบเครื่องมือ

BECTHAI BANGKOK EQUIPMENT & CHEMICAL CO., LTD.
99/9 Moo 2, Maha Sawat, Phutthamonthon, Nakhon Pathom. 73170. Thailand.
Tel: +66 3424 5299 Fax: +66 3424 5250
E-mail: bkk@becthai.com Website: www.becthai.com

NSC-TISI-TIS 17025
CALIBRATION 0131

Certificate No. : CAL-25-243

CERTIFICATE OF CALIBRATION

Equipment	:	Spectrophotometer
Manufacturer	:	Thermo Scientific
Model	:	Genesys 20
Serial No.	:	3SGT041007
ID No.	:	LB-Eq-029
Customer	:	Special Lab Envi And Consultant Co.,Ltd.
	:	47/91-93 Moo 3, Tambol Tait,
	:	Amphur Pakrad, Nonthaburi, 11120
Location	:	Becthai Laboratory
Date of Receipt	:	30 April 2025
Date of Calibration	:	2 May 2025
Date of Issue	:	2 May 2025
Ambient Temperature	:	(25±10) °C
Relative Humidity	:	(60±20) %
Condition As-Received	:	Used Item

Calibrated by	Approved by
Ms. Nopparat Suntarotayan	.....
Calibration Engineer	(Ms. Jintana Sangthaijaroenlap)
	Calibration Manager

The reported expended uncertainty of measurement was based on a combined standard uncertainty multiplied by a coverage factor *k* providing a level of confidence of appoximately 95%.

This certificate may not be reproduced other than in full, except with the prior written approval of the head of Calibration Laborator

Indicated values are valid for the state of the Spectrophotometer at the time of calibration only.

BECTHAI BANGKOK EQUIPMENT & CHEMICAL CO., LTD.
99/9 Moo 2, Maha Sawat, Phutthamonthon, Nakhon Pathom. 73170. Thailand.
Tel: +66 3424 5299 Fax: +66 3424 5250
E-mail: bkk@becthai.com Website: www.becthai.com

NSC-TISI-TIS 17025
CALIBRATION 0131

CALIBRATION REPORT

Conditions of this result of calibration

1. Reference Standard Material :

Material	Model	Serial No.	Cert.No.	Due date
Holmium Glass Filter	RM-HG	12705	117342	13 December 2025
Neutral Density Filter	RM-1N2N3N	8323	117341	13 December 2025

2. Traceability : This certification is traceable to the International System of Unit maintained at;

The Starna Scientific Ltd. Accredited Calibration Laboratory No. 0659.

3. Method of calibration :

The calibration procedure was carried out according to ASTM E275-08 (2022) and ASTM E925-09 (2014).

4. Result of calibration :

(✓) without adjustment ( ) after adjustment

5. Equipment Specifications:

Spectral Bandwidth :	8	nm
Data Interval :	1	nm
Scan Speed :	N/A	nm/min

BECTHAI BANGKOK EQUIPMENT & CHEMICAL CO., LTD.
99/9 Moo 2, Maha Sawat, Phutthamonthon, Nakhon Pathom. 73170. Thailand.
Tel: +66 3424 5299 Fax: +66 3424 5250
E-mail: bkk@becthai.com Website: www.becthai.com

NSC-TISI-TIS 17025
CALIBRATION 0131

Certificate No. : CAL-25-243

CALIBRATION REPORT

Wavelength Calibration

Certified Values of Reference Material	Nominal Value (nm)	UUC*Reading (nm)	Error (nm)	Uncertainty of Measurement (± nm)	*k* Factor
418.40	418	418	-0.40	0.59	2.00
537.00	537	537	0.00	0.59	2.00
638.00	638	638	0.00	0.59	2.00

Photometric Calibration for Visible

Wavelength (nm)	Certified Values of Reference Material (A)	UUC* Reading (A)	Error (A)	Uncertainty of Measurement (± A)	*k* Factor
420.0	Zero	0.000	0.0000	0.0028	2.00
	0.5703	0.573	0.0027	0.0045	2.00
	0.7336	0.739	0.0054	0.0045	2.00
	1.0709	1.074	0.0031	0.0045	2.00
440.0	Zero	0.000	0.0000	0.0028	2.00
	0.5592	0.561	0.0018	0.0045	2.00
	0.716	0.720	0.0040	0.0045	2.00
	1.0454	1.046	0.0006	0.0045	2.00
465.0	Zero	0.000	0.0000	0.0028	2.00
	0.5094	0.511	0.0016	0.0045	2.00
	0.6601	0.663	0.0029	0.0045	2.00
	0.963	0.965	0.0020	0.0045	2.00
546.1 (546.0)	Zero	0.000	0.0000	0.0028	2.00
	0.5206	0.523	0.0024	0.0045	2.00
	0.6677	0.672	0.0043	0.0045	2.00
	0.9763	0.979	0.0027	0.0045	2.00
590.0	Zero	0.000	0.0000	0.0028	2.00
	0.5522	0.553	0.0008	0.0045	2.00
	0.6966	0.698	0.0014	0.0045	2.00
	1.0201	1.020	-0.0001	0.0045	2.00
635.0	Zero	0.000	0.0000	0.0028	2.00
	0.5377	0.542	0.0043	0.0045	2.00
	0.6649	0.670	0.0051	0.0045	2.00
	0.9736	0.977	0.0034	0.0045	2.00

Remark : Each individual filter is measured against the empty filter holder (blank) used to zero the Spectrophotometer.

Note:

UUC* : Unit Under Calibration

- End of Report -

BECTHAI BANGKOK EQUIPMENT & CHEMICAL CO., LTD.
99/9 Moo 2, Maha Sawat, Phutthamonthon, Nakhon Pathom. 73170. Thailand.
Tel: +66 3424 5299 Fax: +66 3424 5250
E-mail: bkk@becthai.com Website: www.becthai.com

NSC-TISI-TIS 17025
CALIBRATION 0131

Certificate No. : CAL-25-243

CERTIFICATE OF CALIBRATION

Equipment	:	Spectrophotometer
Manufacturer	:	Thermo Scientific
Model	:	Genesys 20
Serial No.	:	3SGT041007
ID No.	:	LB-Eq-029
Customer	:	Special Lab Envi And Consultant Co.,Ltd.
	:	47/91-93 Moo 3, Tambol Tait,
	:	Amphur Pakrad, Nonthaburi, 11120
Location	:	Becthai Laboratory
Date of Receipt	:	30 April 2025
Date of Calibration	:	2 May 2025
Date of Issue	:	2 May 2025
Ambient Temperature	:	(25±10) °C
Relative Humidity	:	(60±20) %
Condition As-Received	:	Used Item

Calibrated by	Approved by
Ms. Nopparat Suntarotayan	.....
Calibration Engineer	(Ms. Jintana Sangthaijaroenlap)
	Calibration Manager

The reported expended uncertainty of measurement was based on a combined standard uncertainty multiplied by a coverage factor *k* providing a level of confidence of appoximately 95%.

This certificate may not be reproduced other than in full, except with the prior written approval of the head of Calibration Laborator

Indicated values are valid for the state of the Spectrophotometer at the time of calibration only.

BECTHAI BANGKOK EQUIPMENT & CHEMICAL CO., LTD.
99/9 Moo 2, Maha Sawat, Phutthamonthon, Nakhon Pathom. 73170. Thailand.
Tel: +66 3424 5299 Fax: +66 3424 5250
E-mail: bkk@becthai.com Website: www.becthai.com

NSC-TISI-TIS 17025
CALIBRATION 0131

CALIBRATION REPORT

Conditions of this result of calibration

1. Reference Standard Material :

Material	Model	Serial No.	Cert.No.	Due date
Holmium Glass Filter	RM-HG	12705	117342	13 December 2025
Neutral Density Filter	RM-1N2N3N	8323	117341	13 December 2025

2. Traceability : This certification is traceable to the International System of Unit maintained at;

The Starna Scientific Ltd. Accredited Calibration Laboratory No. 0659.

3. Method of calibration :

The calibration procedure was carried out according to ASTM E275-08 (2022) and ASTM E925-09 (2014).

4. Result of calibration :

(✓) without adjustment ( ) after adjustment

5. Equipment Specifications:

Spectral Bandwidth :	8	nm
Data Interval :	1	nm
Scan Speed :	N/A	nm/min

BECTHAI BANGKOK EQUIPMENT & CHEMICAL CO., LTD.
99/9 Moo 2, Maha Sawat, Phutthamonthon, Nakhon Pathom. 73170. Thailand.
Tel: +66 3424 5299 Fax: +66 3424 5250
E-mail: bkk@becthai.com Website: www.becthai.com

NSC-TISI-TIS 17025
CALIBRATION 0131

Certificate No. : CAL-25-243

CALIBRATION REPORT

Wavelength Calibration

Certified Values of Reference Material	Nominal Value (nm)	UUC*Reading (nm)	Error (nm)	Uncertainty of Measurement (± nm)	*k* Factor
418.40	418	418	-0.40	0.59	2.00
537.00	537	537	0.00	0.59	2.00
638.00	638	638	0.00	0.59	2.00

Photometric Calibration for Visible

Wavelength (nm)	Certified Values of Reference Material (A)	UUC* Reading (A)	Error (A)	Uncertainty of Measurement (± A)	*k* Factor
420.0	Zero	0.000	0.0000	0.0028	2.00
	0.5703	0.573	0.0027	0.0045	2.00
	0.7336	0.739	0.0054	0.0045	2.00
	1.0709	1.074	0.0031	0.0045	2.00
440.0	Zero	0.000	0.0000	0.0028	2.00
	0.5592	0.561	0.0018	0.0045	2.00
	0.716	0.720	0.0040	0.0045	2.00
	1.0454	1.046	0.0006	0.0045	2.00
465.0	Zero	0.000	0.0000	0.0028	2.00
	0.5094	0.511	0.0016	0.0045	2.00
	0.6601	0.663	0.0029	0.0045	2.00
	0.963	0.965	0.0020	0.0045	2.00
546.1 (546.0)	Zero	0.000	0.0000	0.0028	2.00
	0.5206	0.523	0.0024	0.0045	2.00
	0.6677	0.672	0.0043	0.0045	2.00
	0.9763	0.979	0.0027	0.0045	2.00
590.0	Zero	0.000	0.0000	0.0028	2.00
	0.5522	0.553	0.0008	0.0045	2.00
	0.6966	0.698	0.0014	0.0045	2.00
	1.0201	1.020	-0.0001	0.0045	2.00
635.0	Zero	0.000	0.0000	0.0028	2.00
	0.5377	0.542	0.0043	0.0045	2.00
	0.6649	0.670	0.0051	0.0045	2.00
	0.9736	0.977	0.0034	0.0045	2.00

Remark : Each individual filter is measured against the empty filter holder (blank) used to zero the Spectrophotometer.

Note:

UUC* : Unit Under Calibration

- End of Report -

CAL
Calibratech Co.,Ltd.
7/106-7 Moo 2, Sukhaprachasan 3 Rd., Bangpood, Pakkred, Nonthaburi 11120
Tel.(02) 964-6211 Fax.(02) 964-5155, e-mail : calibratech_cal@yahoo.com, calibratech_cal@hotmail.com

ilac-MRA
NSC-TISI-TIS17025
CALIBRATION 0030

Certificate of Calibration

Certificate No. : **68-400223-2**

Submitted by : Special Lab Envi and Consultant Co., Ltd.
47/91 Moo 3 Thambol Tha-it, Pakkret, Nonthaburi 11120

Equipment : Temperature controlled enclosure(Incubator)

Manufacturer : Lovibond — Model : FKU 1800
Range : N/A °C — Resolution : 0.1 °C
Serial No. : 0914643-01 — ID No. : LB-Eq-004

Environment : On site calibration was carried out at the Laboratory, Special Lab Envi and Consultant Co., Ltd.

Ambient Temperature : (26.0 to 26.5) °C
Relative Humidity : (45 to 50) %
Line Voltage : (226.0 to 226.5) V

Date of Received : 19 April 2025
Date of Calibration : 19 April 2025
Date of Issue : 25 April 2025
Calibrated by : Permpon Chanpu
Calibration Method : CAL-M4004, TLAS G-20
The temperature scale used was based on ITS-90

Reference Standard Instruments : This certification is traceable to the International System of Units

Standard Digital Thermometer with RTD Probe

ID No.	Cert. No.	Due Date	Traceability
400046 & 400042	68-400007-1	28 Jul 2025	National Institute of Metrology Thailand (NIMT)

Approved by :

(Permpon Chanpu)
Supervisor

The Uncertainties are for a confidence probability of approximately 95%

This cerificate may not be reproduced other than in full except with the prior written approval of the Calibratech Co.,Ltd.

CAL
Calibratech Co.,Ltd.
7/106-7 Moo 2, Sukhaprachasan 3 Rd., Bangpood, Pakkred, Nonthaburi 11120
Tel.(02) 964-6211 Fax.(02) 964-5155, e-mail : calibratech_cal@yahoo.com, calibratech_cal@hotmail.com

Certificate of Calibration

Certificate No. : 68-400223-2

Result of Calibration : Without Adjustment

UUC Condition As-Received : Good

Function : Temperature measurement

This instrument was setting air ventilation at position 0 (close)

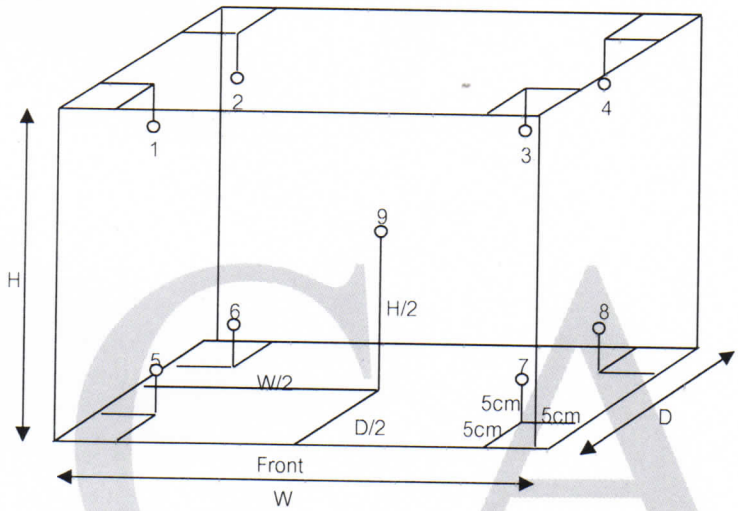

Inside of Chamber

W = 0.55 m

D = 0.73 m

H = 0.50 m

Capacity = 0.20 m^3

Test Point (°C)	Setting Temperature (°C)	Indicating Temperature (°C)	Measured Temperature (°C) @ Sensor No.									Uncertainty (±°C)
			1	2	3	4	5	6	7	8	9	
20.0	20.0	20.0	20.35	20.26	20.28	20.31	20.21	20.09	20.29	20.17	20.22	0.63

Test Point (°C)	Setting Temperature (°C)	Indicating Temperature (°C)	Measured Uniformity (°C)	Measured Stability (°C)	Overall Variation (°C)
20.0	20.0	20.0	0.22	0.34	0.85

Remark The uncertainty is not combine uniformity of the air chamber

This result of calibration was found accurate as shown on date and place of calibration only.

This reported uncertainty of measurement was based on a standard uncertainty multiplied by a coverage factor k = 2 , providing a level of confidence of approximately 95%

- o0o -

CAL
Calibratech Co.,Ltd.
7/106-7 Moo 2, Sukhaprachasan 3 Rd., Bangpood, Pakkred, Nonthaburi 11120
Tel.(02) 964-6211 Fax.(02) 964-5155, e-mail : calibratech_cal@yahoo.com, calibratech_cal@hotmail.com

ilac-MRA
NSC-TISI-TIS17025
CALIBRATION 0030

Certificate of Calibration

Certificate No. : **68-200127-1**

Submitted by : Special Lab Envi and Consultant Co., Ltd.
47/91-93 Moo 3,Tambol Tha-It, Pakkret, Nonthaburi 11120

Equipment : Electronic Balance

Manufacturer :	AND	Model :	GR-200
Serial No. :	14245322	ID No. :	LB-Eq-016
Capacity :	210 g	Resolution :	0.0001 g

Environment : On site calibration was carried out at the Laboratory,
Special Lab Envi and Consultant Co., Ltd.

Ambient Temperature :	(25.5 to 26.1)	°C
Relative Humidity :	(56.6 to 57.0)	%
Air Pressure :	1008.0	mbar

Date of Received : 19 April 2025
Date of Calibration : 19 April 2025
Date of Issue : 22 April 2025
Calibrated by : Satja Sangkhum

Calibration Method : In-house method CAL-M2001 based on UKAS Publication ref : LAB 14 Edition 7 - November 2022

Reference Standard Instruments : This certification is traceable to the International System of Units

Standard Weights

ID No.	Cert. No.	Due Date	Traceability
E261-E2624	C02242009	07 Nov 2025	National Institute of Metrology (Thailand), (NIMT)

Approved by :
(Surachai Promthong)
Laboratory Manager

The Uncertainties are for a confidence probability of approximately 95%

This cerificate may not be reproduced other than in full except with the prior written approval of the Calibratech Co.,Ltd.

CAL
Calibratech Co.,Ltd.
7/106-7 Moo 2, Sukhaprachasan 3 Rd., Bangpood, Pakkred, Nonthaburi 11120
Tel.(02) 964-6211 Fax.(02) 964-5155, e-mail : calibratech_cal@yahoo.com, calibratech_cal@hotmail.com

Certificate of Calibration

Certificate No. : 68-200127-1

Result of Calibration : Without Adjustment

UUC Condition As-Received : Good

Departure of indication from nominal value

Nominal Value (g)	Correction (g)	Uncertainty ± (g)
0.001	0.0000	0.00011
0.01	0.0000	0.00011
0.1	0.0000	0.00011
0.5	0.0000	0.00011
2	0.0000	0.00011
5	0.0000	0.00011
10	0.0000	0.00011
50	0.0001	0.00014
100	0.0001	0.00020
200	0.0000	0.00038

This result of calibration was found accurate as shown on date and place of calibration only.

This reported uncertainty of measurement was based on a standard uncertainty mutiplied by a coverage factor k = 2.00 , providing a level of confidence of approximately 95%

Eccentric error

Load test : 50 g

A	B	C	D	E	
-0.0005	0.0002	0.0004	0.0002	0.0000	g

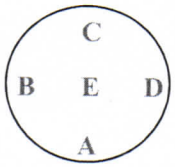

Repeatability

Load test : 200 g

Stdev. : 0.00005 g

- o0o -

CAL
Calibratech Co.,Ltd.
7/106-7 Moo 2, Sukhaprachasan 3 Rd., Bangpood, Pakkred, Nonthaburi 11120
Tel.(02) 964-6211 Fax.(02) 964-5155, e-mail : calibratech_cal@yahoo.com, calibratech_cal@hotmail.com

ilac-MRA
NSC-TISI-TIS17025
CALIBRATION 0030

Certificate of Calibration

Certificate No. : **68-400223-4**

Submitted by : Special Lab Envi and Consultant Co., Ltd.
47/91-93 Moo 3, Tambol Tha-It, Pakkret, Nonthaburi 11120

Equipment : Temperature controlled enclosure (Refrigerator)

Manufacturer : Frozen — Model : CC-2288F
Range : N/A °C — Resolution : 1 °C
Serial No. : CC-2288F-1163-003 — ID No. : LB-Eq-046

Environment : On site calibration was carried out at the Laboratory, Special Lab Envi and Consultant Co., Ltd.

Ambient Temperature : (25.5 to 26.5) °C
Relative Humidity : (50 to 55) %
Line Voltage : (226.0 to 226.5) V

Date of Received : 19 April 2025
Date of Calibration : 19 April 2025
Date of Issue : 26 April 2025
Calibrated by : Permpon Chanpu
Calibration Method : CAL-M4004, TLAS G-20
The temperature scale used was based on ITS-90

Reference Standard Instruments : This certification is traceable to the International System of Units

Standard Digital Thermometer with Thermocouple probe

ID No.	Cert. No.	Due Date	Traceability
400029 & 400032	67-400584-1	29 Apr 2025	National Institute of Metrology Thailand (NIMT)

Approved by :

(Permpon Chanpu)
Supervisor

The Uncertainties are for a confidence probability of approximately 95%

This cerificate may not be reproduced other than in full except with the prior written approval of the Calibratech Co.,Ltd.

CAL
Calibratech Co.,Ltd.
7/106-7 Moo 2, Sukhaprachasan 3 Rd., Bangpood, Pakkred, Nonthaburi 11120
Tel.(02) 964-6211 Fax.(02) 964-5155, e-mail : calibratech_cal@yahoo.com, calibratech_cal@hotmail.com

Certificate of Calibration

Certificate No. : 68-400223-4

Result of Calibration : Without Adjustment

UUC Condition As-Received : Good

Function : Temperature measurement

This instrument was setting air ventilation at position 0 (close)

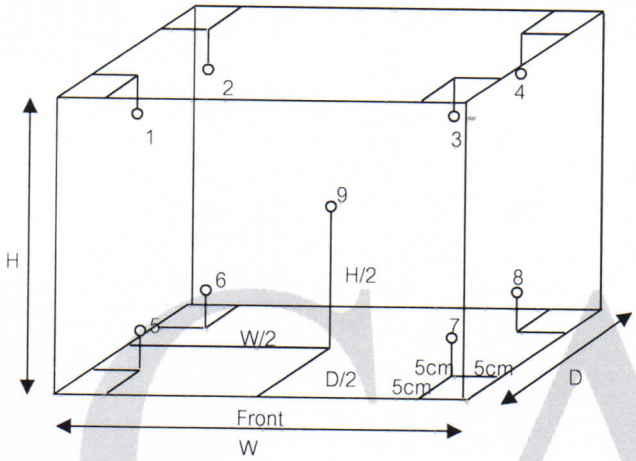

Inside of Chamber

W = 1.02 m

D = 0.47 m

H = 1.48 m

Capacity = 0.71 m^3

Test Point (°C)	Setting Temperature (°C)	Indicating Temperature (°C)	Measured Temperature (°C) @ Sensor No.									Uncertainty (±°C)
			1	2	3	4	5	6	7	8	9	
3	3	3	4.0	3.0	2.8	2.6	4.0	4.0	2.2	2.0	3.0	1.0

Test Point (°C)	Setting Temperature (°C)	Indicating Temperature (°C)	Measured Uniformity (°C)	Measured Stability (°C)	Overall Variation (°C)
3	3	3	1.3	0.5	2.7

Remark The uncertainty is not combine uniformity of the air chamber

This result of calibration was found accurate as shown on date and place of calibration only.

This reported uncertainty of measurement was based on a standard uncertainty multiplied by a coverage factor k = 2 , providing a level of confidence of approximately 95%

- o0o -

TECHNOLOGY PROMOTION ASSOCIATION (THAILAND-JAPAN)
CORPORATE SERVICES 3: EQUIPMENT CALIBRATION AND TESTING SERVICES
534/4 PATTANAKARN ROAD SOI 18, SUANLUANG, SUANLUANG BANGKOK 10250
TEL.0-2717-3000-29 FAX.0-2719-9484

NSC-TISI-TIS17025
CALIBRATION 0008

Certificate of Calibration

Cert.No.: 24CH945
Page.: 1 of 2

Equipment :	pH Meter
Manufacturer :	Eutech
Model :	pH 700
Serial No. :	2858459
ID No. :	LB-Eq-027
Condition As-Received:	Used Item
Received Date :	05 August 2024
Calibration Date :	06 August 2024
Reference :	2408-0150WN-1
Submitted by :	Special Lab Envi And Consultant Co.,Ltd 47/91-93 Moo 3 Thambon Tha-it, Pakkret, Nonthaburi 11120
Ambient Temperature :	(25 ± 2.5) °C
Relative Humidity :	(50 ± 15) %
Calibration Procedure :	In - house method : - CP-CH5 by direct measurement with DC voltage standard and direct measurement with certified reference material (CRM)
Calibrated by :	Walalak Sirithean
Approved by :	Saithip Approved Signatory

( ) Unnopphol Harachai
( ) Ponpan Paipim
(✓) Saithip Meangmai

Issue Date : 6 August 2024

The Uncertainties are for a confidence probability of approximately 95%

This certificate may not be reproduced other than in full, except with the prior written Approval of the head of Corporate Services 3 : Equipment Calibration and Testing Services.

Condition of this calibration result

1. Reference Standard Instrument

Instrument	Serial No.	ID No.	Cert. No.	Due Date
1) Document Process Calibrator	54030049	130RC116	23E2802	27 Aug 2024

- This Certification is traceable to SI Throught Technology Promotion Association (Thailand - Japan)

2. Certified Reference Materials : The measurement results are traceable to SI through CPA chem Ltd., ANSI-ASQ National Accreditation Board, Accredited No. AR-1835

Buffer Solution	Manufacturer	Lot No.	Exp. date
pH 4.008	CPA chem	970851	25 Apr 2026
pH 6.986	CPA chem	970852	25 Apr 2025
pH 9.997	CPA chem	970853	25 Apr 2025

3. This certificate is valid only to the item calibrated on date and place of calibration.

Calibration Results

Function : mV Measurement

Performing standard curve by Document Process Calibrator at pH (4,7,10)

Unit Under Calibration	Nominal Value	Standard Voltage Input	Actual Reading		Uncertainty of Measurement (±mV)	Coverage factor *k*
	pH	mV	mV	pH		
pH Meter	4.00	177.48	177.4	4.01	0.058	2.00
S/N.: 2858459	7.00	0.00	0.0	7.00	0.058	2.00
	10.00	-177.48	-177.5	10.01	0.058	2.00

Function : pH Measurement

Performing three buffers standard curve by using buffer nominal pH (4,7,10)

Unit Under Calibration	Standard pH Buffer Solution	Actual pH Reading	Actual mV Reading (mV)	Uncertainty of pH Measurement (±)	Coverage factor *k*
pH Electrode	4.008	4.01	179.4	0.0071	2.00
S/N.: 3205384	6.986	6.99	4.0	0.0099	2.00
	9.997	10.01	-169.8	0.0092	2.00

The reported uncertainty of measurement was based on a standard uncertainty multiplied by a coverage factor *k*, providing a level of confidence of approximately 95 %.

-o0o-

TECHNOLOGY PROMOTION ASSOCIATION (THAILAND-JAPAN)
CORPORATE SERVICES 3: EQUIPMENT CALIBRATION AND TESTING SERVICES
534/4 PATTANAKARN ROAD SOI 18, SUANLUANG, SUANLUANG BANGKOK 10250
TEL.0-2717-3000-29 FAX.0-2719-9484

NSC-TISI-TIS17025
CALIBRATION 0008

Certificate of Calibration

Cert. No.: 24LM125

Equipment : pH Meter with Sensor

Manufacturer : Eutech

Model : pH 700

Serial No. : 2858459

ID No. : LB-Eq-027

Submitted by : Special Lab Envi And Consultant Co.,Ltd
47/91-93 Moo 3 Thambon Tha-it,
Pakkret Nonthaburi 11120

Location : TPA On Site Calibration Laboratory

Received Order : 05 August 2024
Calibrated Date : 06 August 2024
Ambient Temperature : (26 ± 10) °C
Relative Humidity : (50 ± 30) %
AC Line Voltage : (220 ± 22) V

Calibrated by : Warakorn Lerngagtrakul

Approved by : Kunchit
Approved Signatory

( ) Ponpan Paipim
( ) Suwit Imjai
(✓) Kunchit Promprat

Issue Date : 06 August 2024

The Uncertainties are for a confidence probability of approximately 95%

This certificate may not be reproduced other than in full, except with the prior written
Approval of the head of Corporate Services 3 : Equipment Calibration and Testing Services.

Equipment : pH Meter with Sensor **Cert. No.:** 24LM125
Condition As-Received : Used Item **Page.:** 2 of 2
Reference : 2408-0150WN-2

Procedure Used :-

Calibration were conducted using in-house calibration procedure CP-OT01 according to comparison with Industrial Platinum Resistance Thermometer (IPRT) into Temperature Bath.

The temperature scale used was based on ITS-90.

Condition of this result of calibration

1. Reference standard instrument:-

Instrument	Serial No.	Cert. No.	Traceable	Due Date
1) Digital Thermometer	3240076	24I317	TPA	21 Mar 2025

2. This certificate is valid only to the item calibrated on date and place of calibration.
3. This certification is traceable to the International System of Unit.

Remark : TPA : Technology Promotion Association (Thailand - Japan)

Result of Calibration :- (*) Without Adjustment

Function : Temperature measurement.

This instrument was connected with temperature sensor, S/N.: PH5TEMB01P

Calibration Point (°C)	Immersion Depth (mm)	Standard Temperature (°C)	UUC* Reading (°C)	Error (°C)	Uncertainty (± °C)	Coverage Factor *k*
25.0	100	25.002	25.0	-0.002	0.16	2.00

UUC* : Unit Under Calibration

The reported uncertainty of measurement was based on a standard uncertainty multiplied by a coverage factor ***k***, providing a level of confidence of approximately 95 %.

-o0o-